TOSHIBA

FILE NO.810-200771GR

SERVICE MANUAL

DVD VIDEO PLAYER

SD-470EKE

The above model is classified as a green product (*1), as indicated by the underlined serial number. This Service Manual describes replacement parts for the green product. When repairing this green product, use the part(s) described in this manual and lead-free solder (*2).

For (*1) and (*2), see the next page.

© TOSHIBA CORPORATION 2007

JULY 2007 GREEN

(*1) GREEN PRODUCT PROCUREMENT

The EC is actively promoting the WEEE & RoHS Directives that define standards for recycling and reuse of Waste Electrical and Electronic Equipment and for the Restriction of the use of certain Hazardous Substances. From July 1, 2006, the RoHS Directive will prohibit any marketing of new products containing the restricted substances.

Increasing attention is given to issues related to the global environmental. Toshiba Corporation recognizes environmental protection as a key management tasks, and is doing its utmost to enhance and improve the quality and scope of its environmental activities. In line with this, Toshiba proactively promotes Green Procurement, and seeks to purchase and use products, parts and materials that have low environmental impacts.

Green procurement of parts is not only confined to manufacture. The same green parts used in manufacture must also be used as replacement parts.

(*2) LEAD-FREE SOLDER

This product is manufactured using lead-free solder as a part of a movement within the consumer products industry at large to be environmentally responsible. Lead-free solder must be used in the servicing and repair of this product.

WARNING

This product is manufactured using lead free solder.

DO NOT USE LEAD BASED SOLDER TO REPAIR THIS PRODUCT !

The melting temperature of lead-free solder is higher than that of leaded solder by 86°F to 104°F (30°C to 40°C). Use of a soldering iron designed for lead-based solders to repair product made with lead-free solder may result in damage to the component and or PCB being soldered. Great care should be made to ensure high-quality soldering when servicing this product — especially when soldering large components, through-hole pins, and on PCBs — as the level of heat required to melt lead-free solder is high.

CONTENTS

1. PRINTED WIRING BOARD AND SCHEMATIC DIAGRAM

Printed Wiring Board and Schematic Diagram

2. BLOCK DIAGRAMS

SET Block Diagram
Power Supply Block Diagram

3. CIRCUIT DIAGRAMS

Power Supply Circuit Diagram
Front Display Circuit Diagram
Main chip & SDRAM Circuit Diagram
Power & AV Output Cicuit Diagram
FE & Driver Circuit Diagram
Flash I/F Circuit Diagram
Audio Circuit Diagram
SCART Circuit Diagram

4. PC BOARDS

Power Supply PC Board (TOP side)
Mian PC Board (TOP side)
Mian PC Board (Bottom side)
Front Display PC Board (TOP side & Bottom side)
SCART PC Board (TOP side & Bottom side)

5. IC BLOCK DIAGRAMS

6. PARTS LIST

7. EXPLODED VIEWS

MAIN UNIT

8.SPECIFICATIONS

Printed Wiring Board and Schematic Diagram

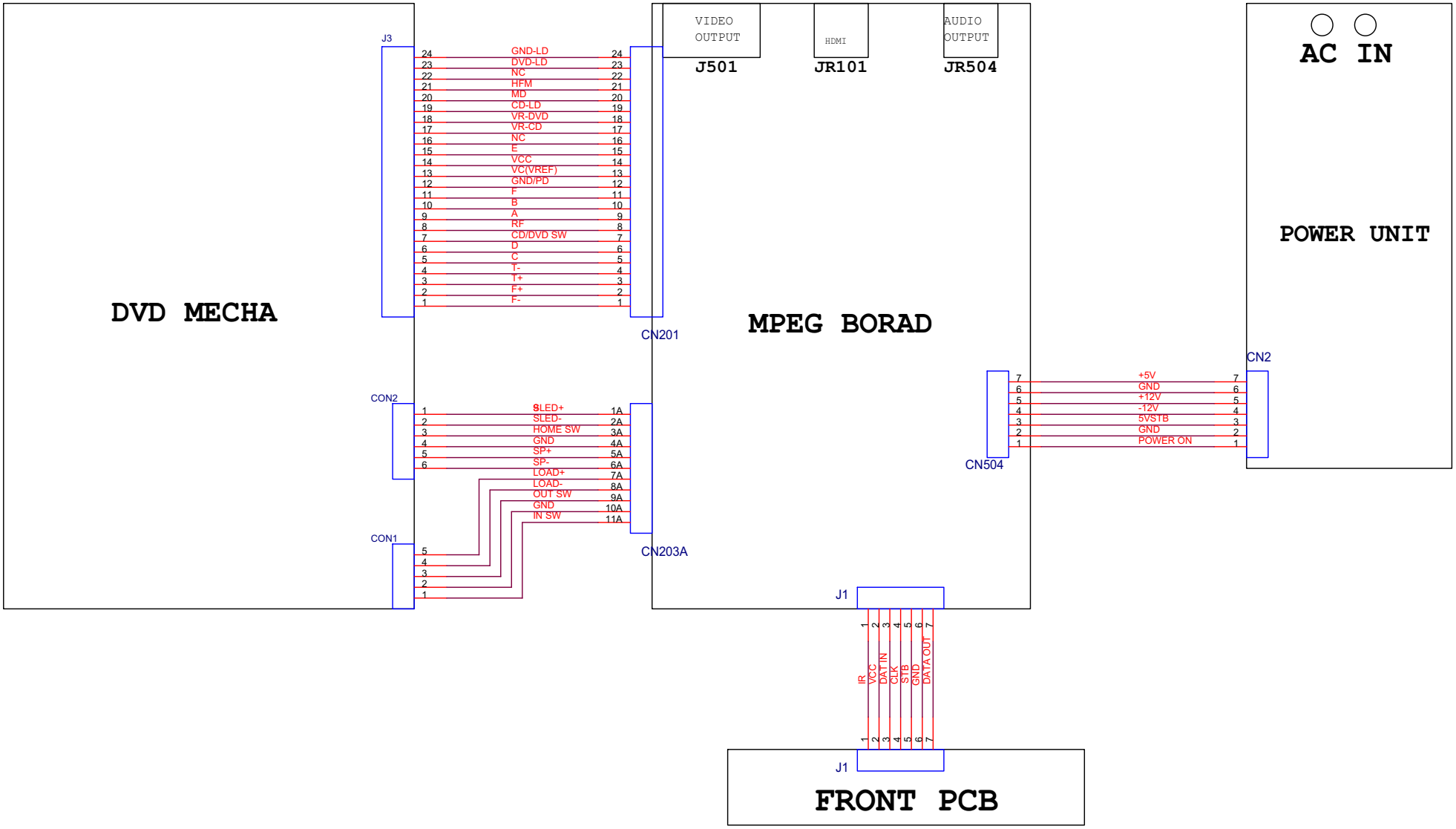

SET Block Diagram

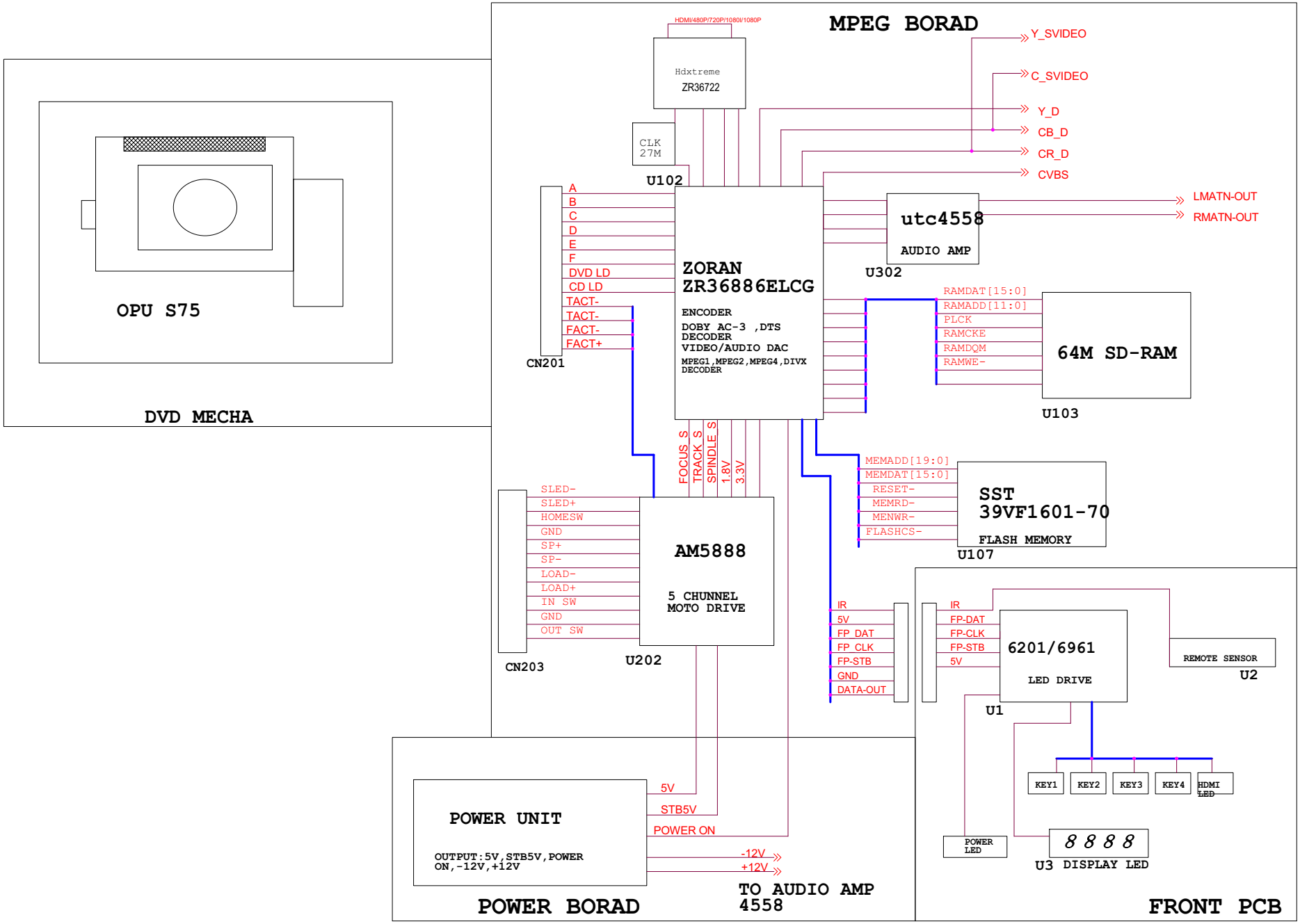

TAS000080XX Power Supply Block Diagram

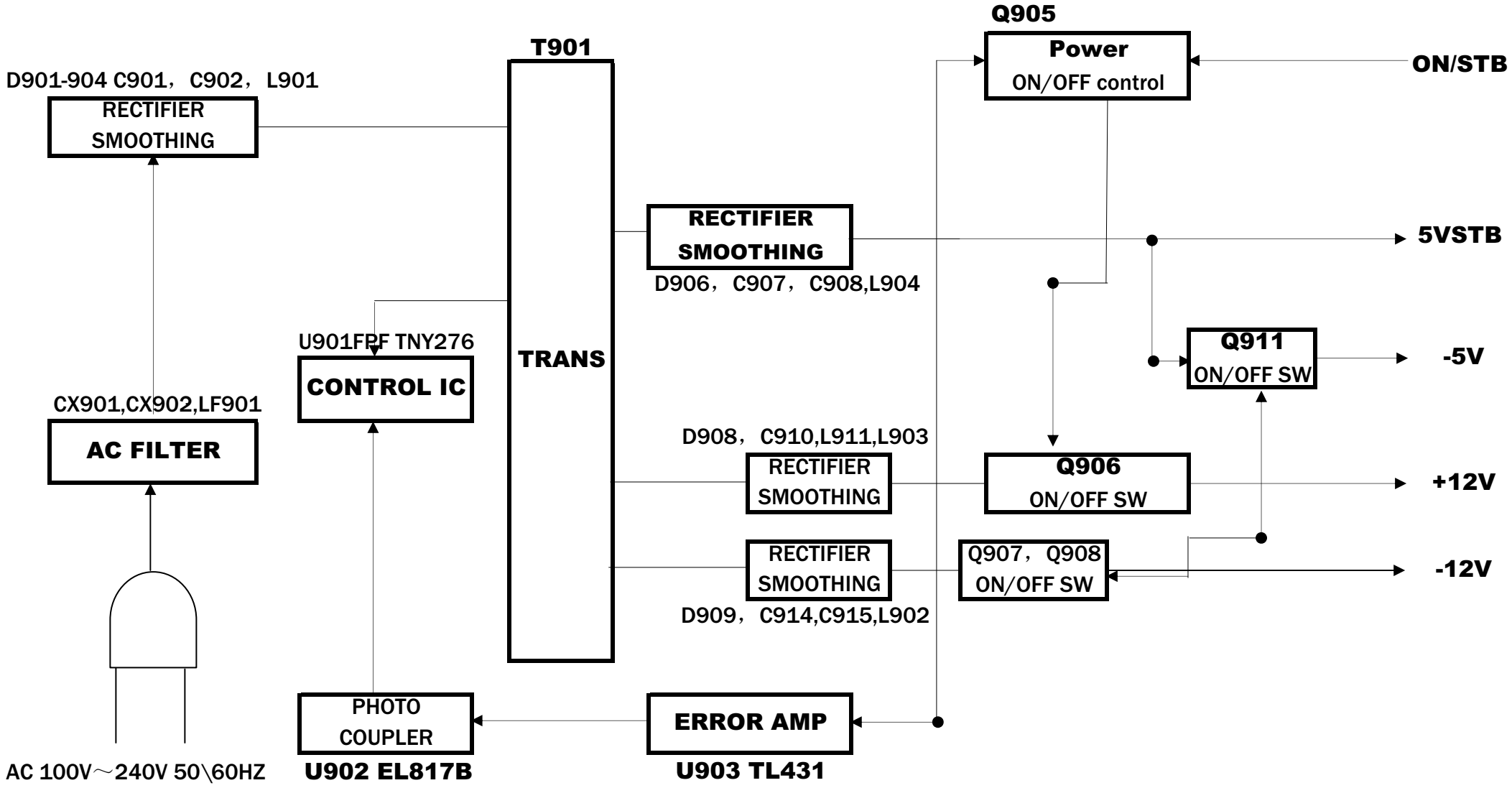

TAS000080XX CIRCUIT DIAGRAMS

Power Supply Circuit Diagram

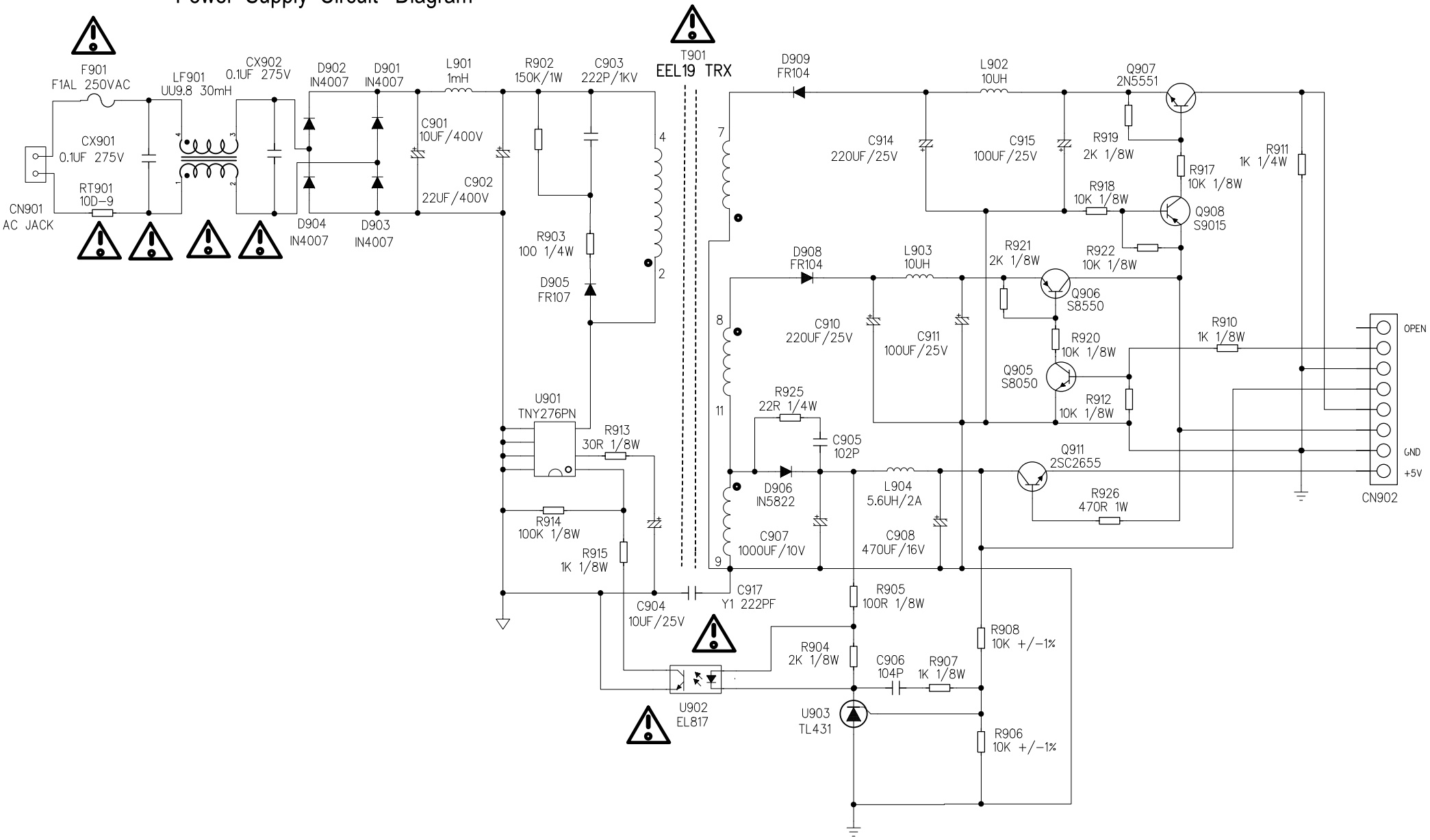

TAS000085XX Power Supply Block Diagram

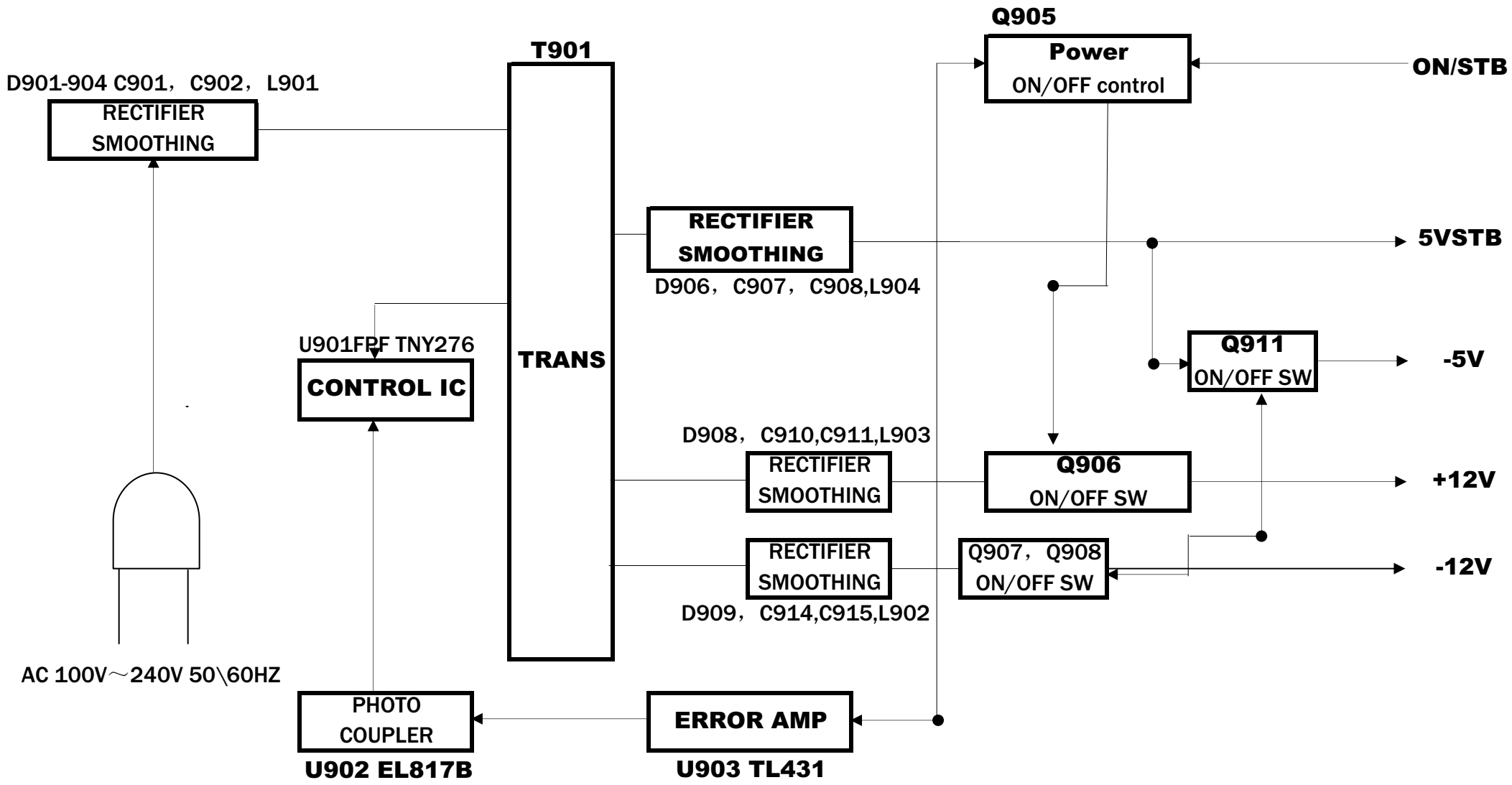

TAS000085XX CIRCUIT DIAGRAMS

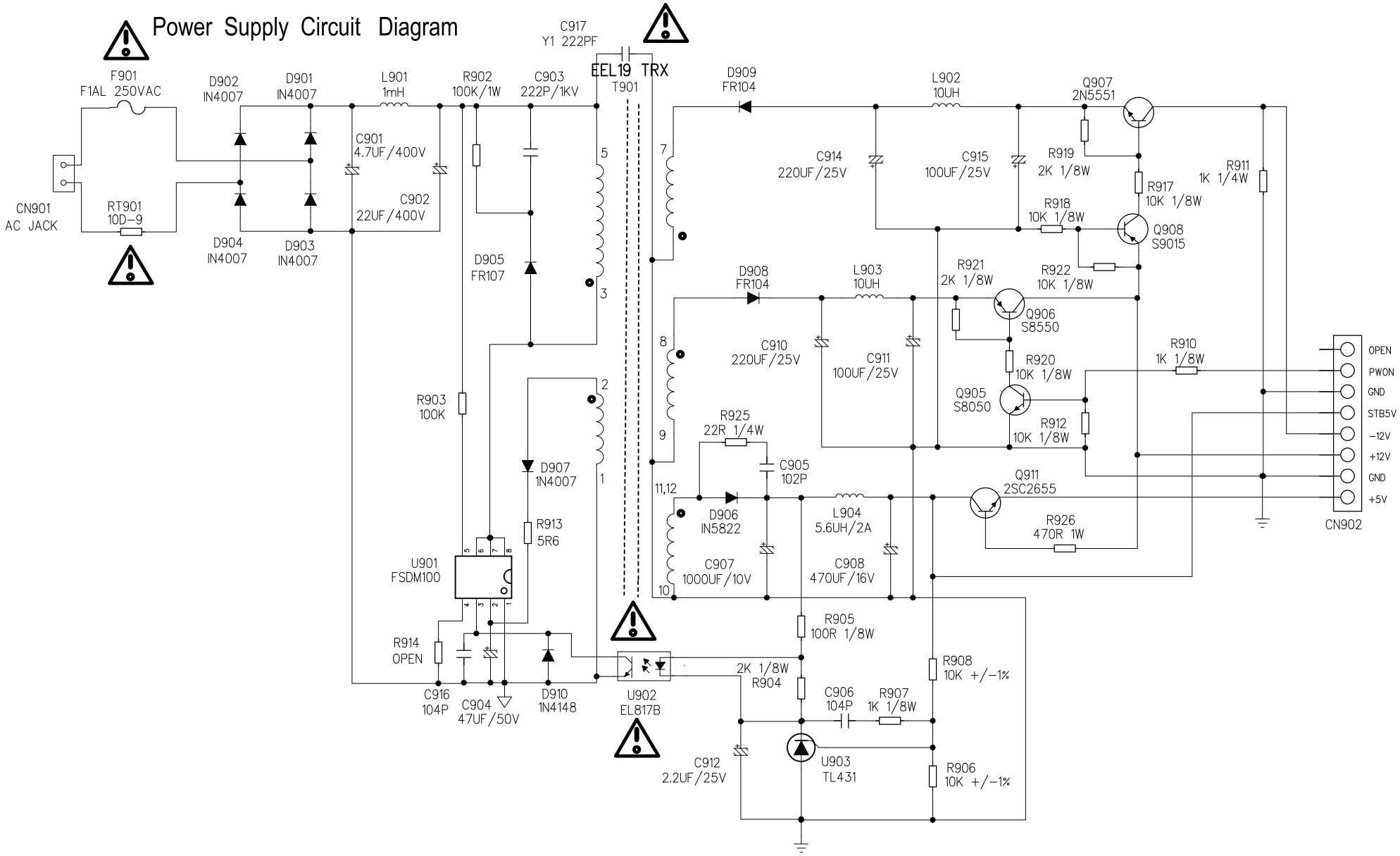

Front Display Circuit Diagram

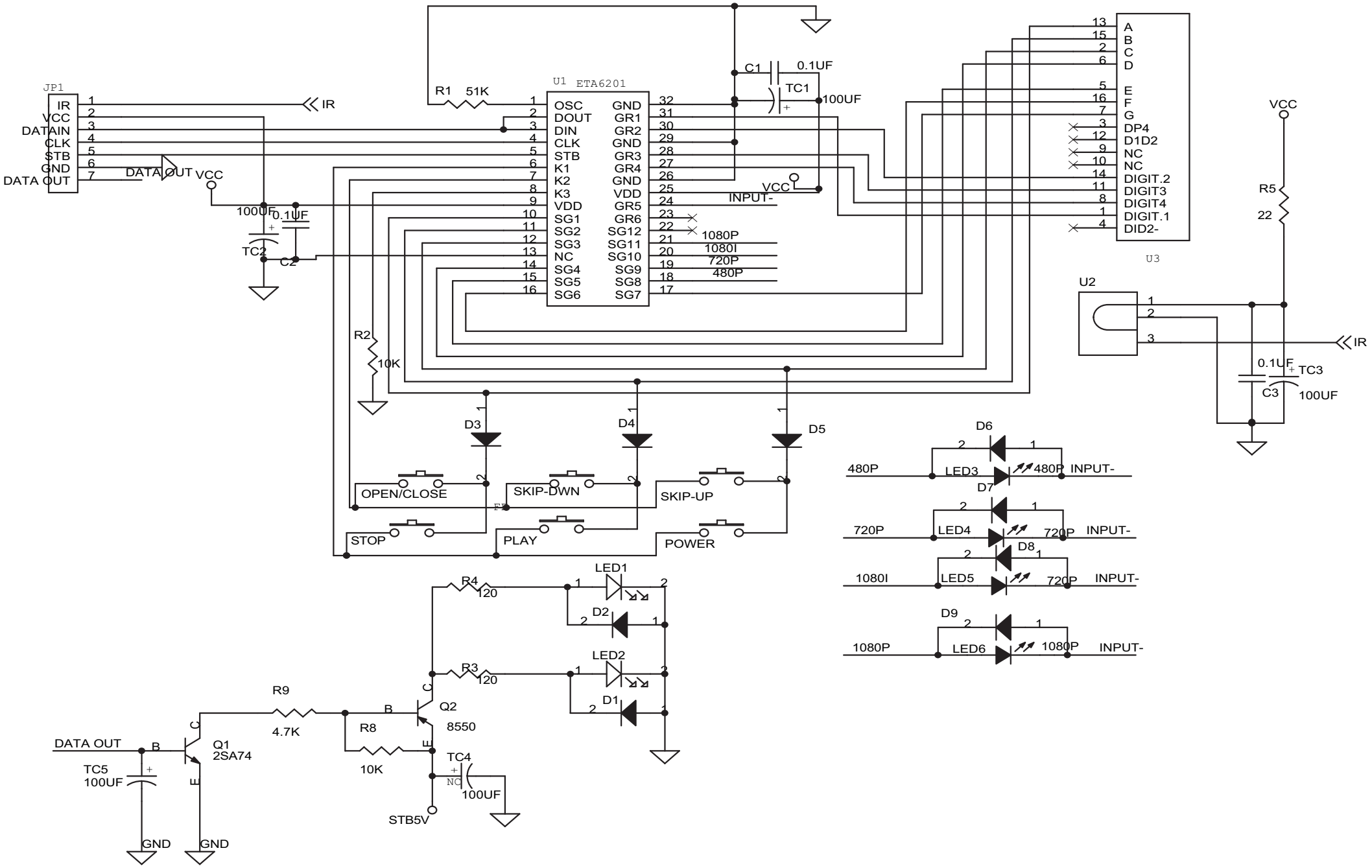

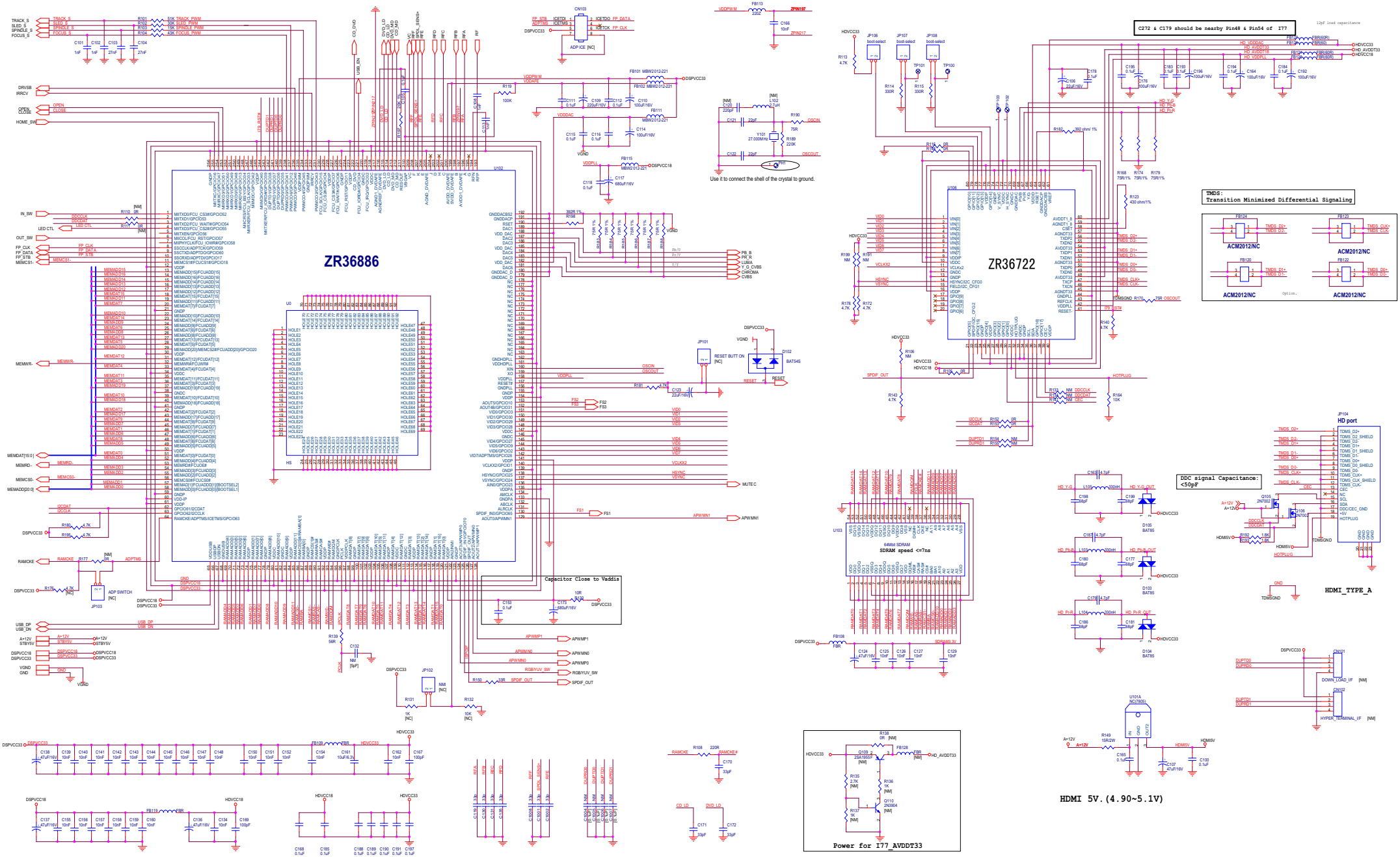

Main chip & SDRAM Circuit Diagram

Power & AV Output Circuit Diagram

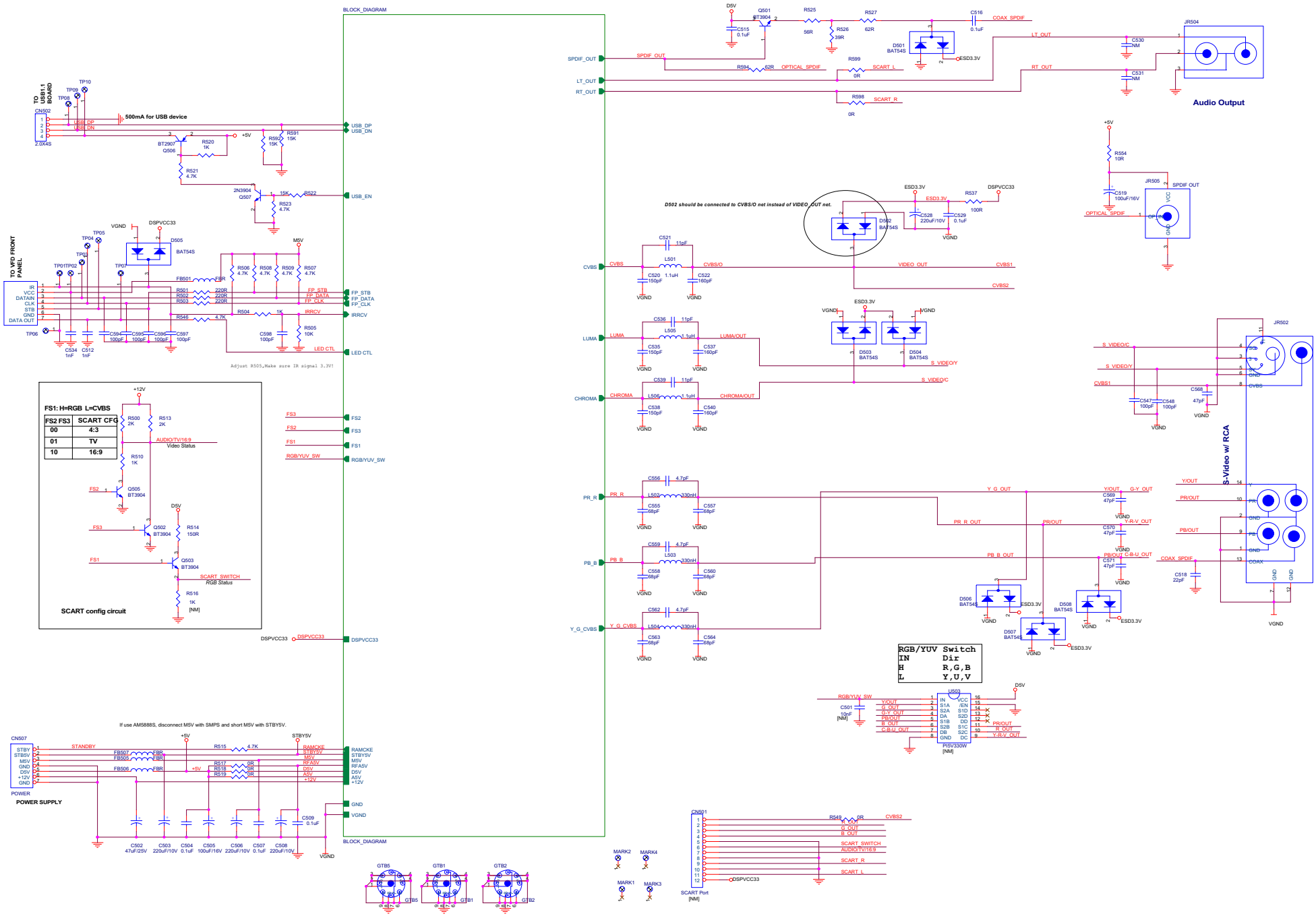

FE & Driver Circuit Digaram

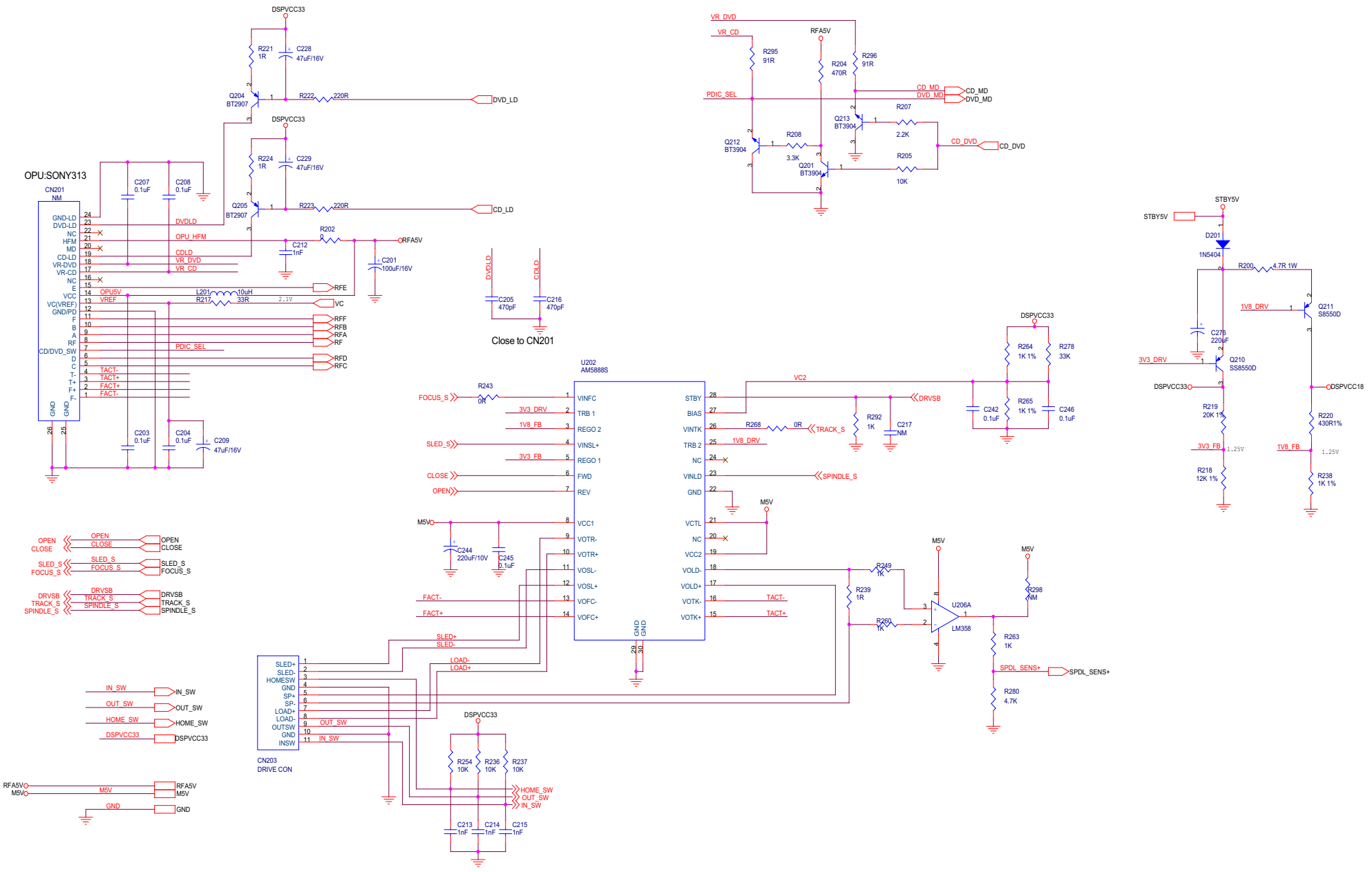

Flash & I/F Circuit Diagram

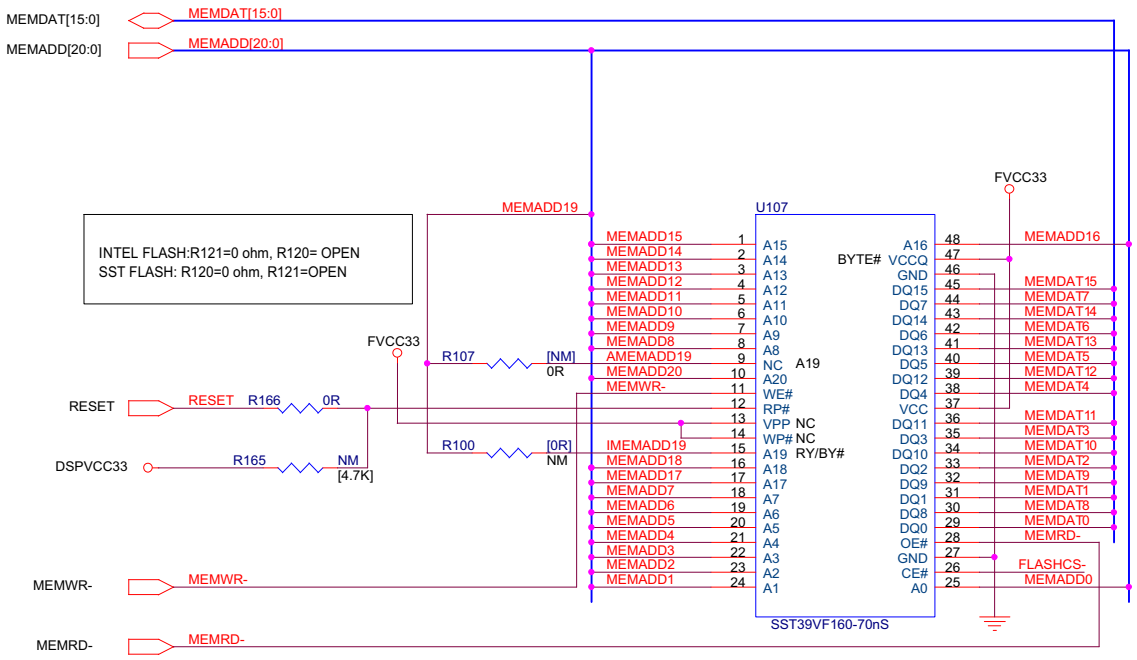

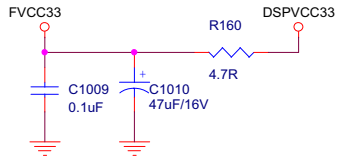

Close to Pin37 of U107

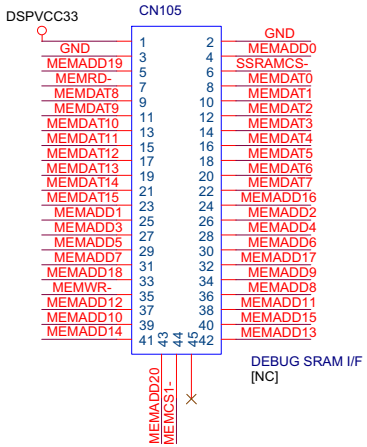

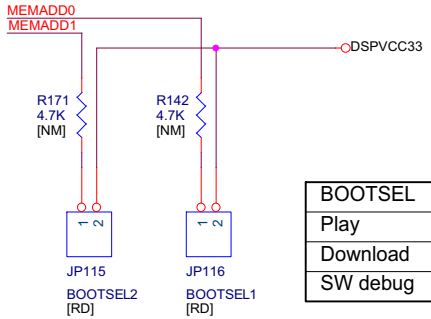

BOOTSEL	JP115	JP116
Play	OPEN	OPEN
Download	OPEN	CLOSE
SW debug	CLOSE	OPEN

PCB layout guy: please print this table on PCB silkscreen layer

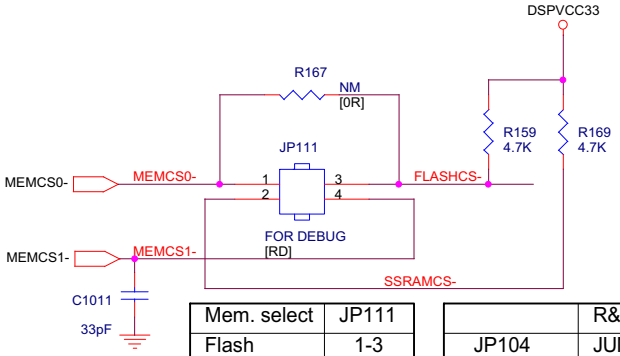

Mem. select	JP111
Flash	1-3
SRAM	1-2 3-4

	R&D	MP
JP104	JUMPER	NM
R167	NM	0R
R169	4.7K	NM

PCB layout guy: please print this table on PCB silkscreen layer

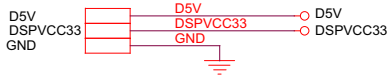

Audio Circuit Diagram

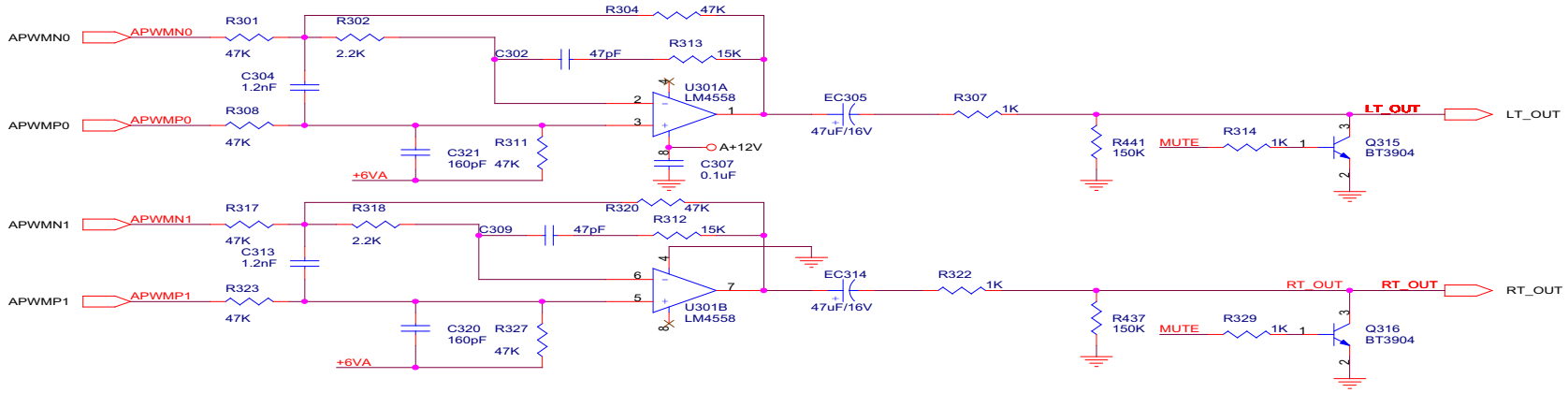

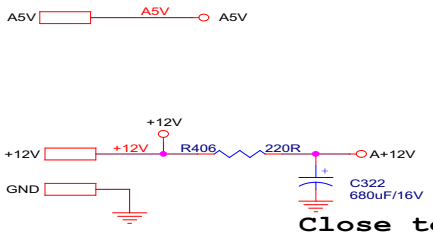

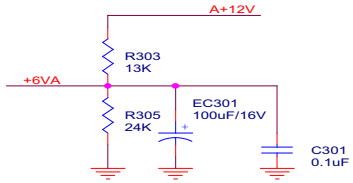

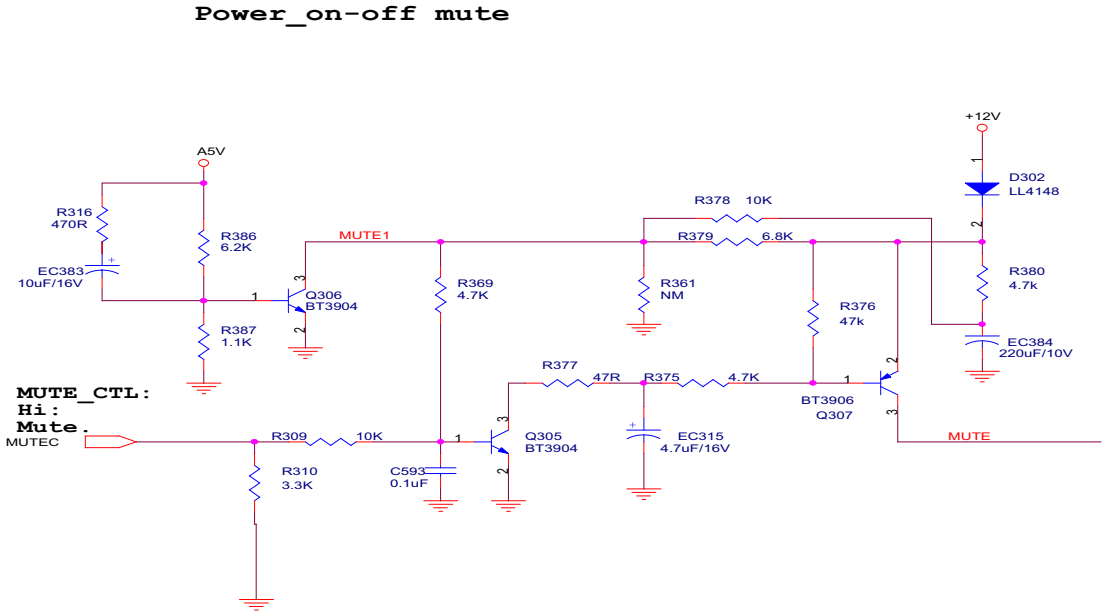

SCART CIRCUIT DIAGRAM

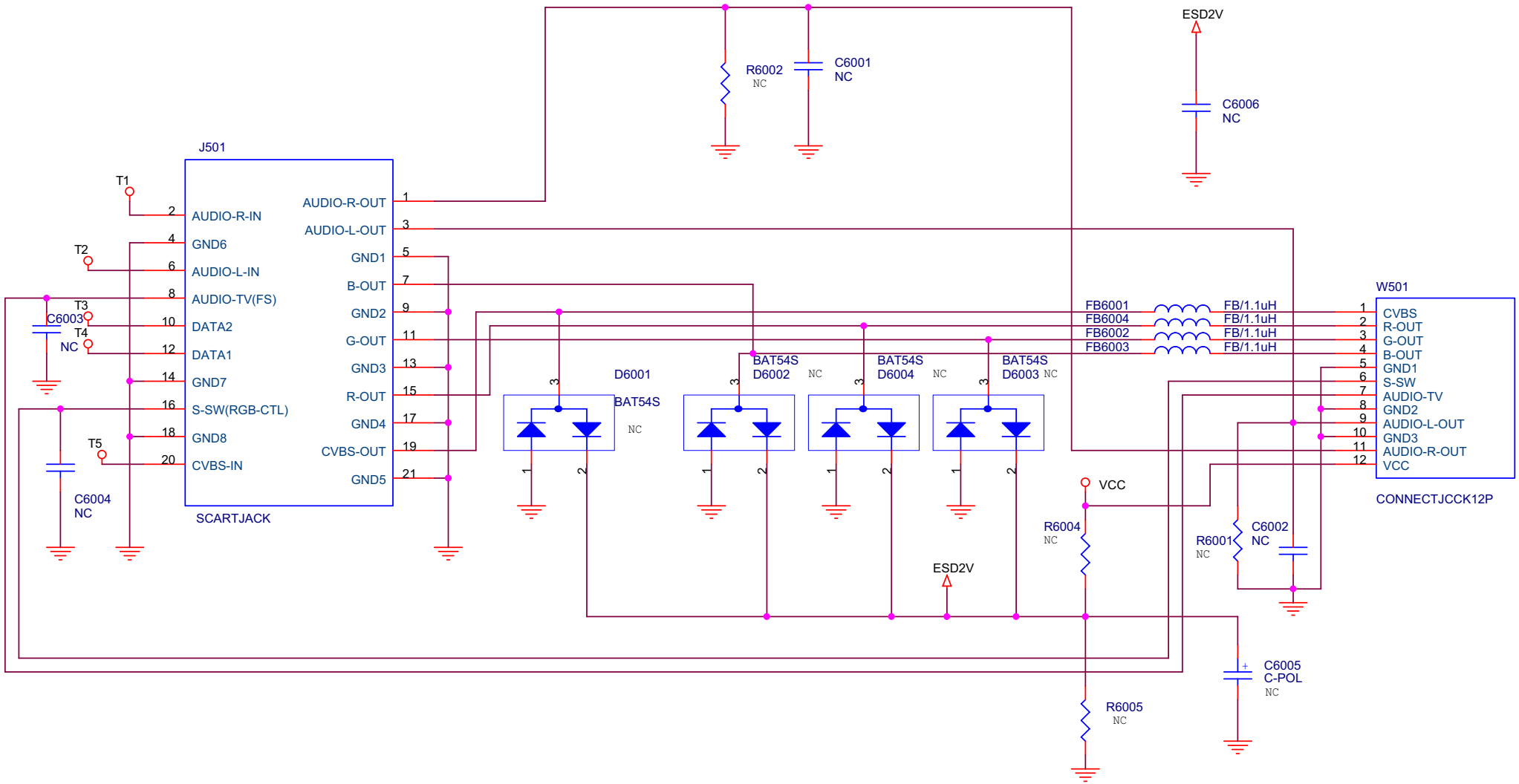

TAS000080XX Power Supply PC Board(TOP side)

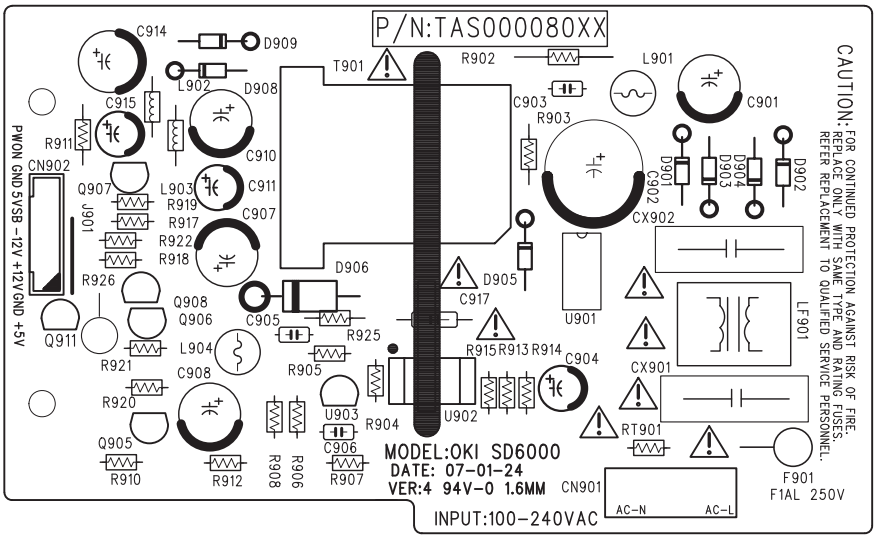

TAS000085XX Power Supply PC Board(TOP side)

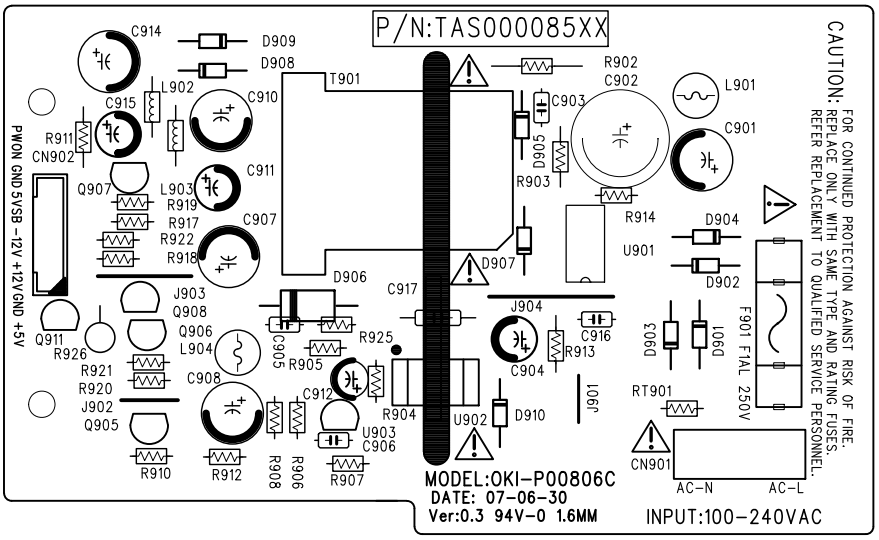

Main Board

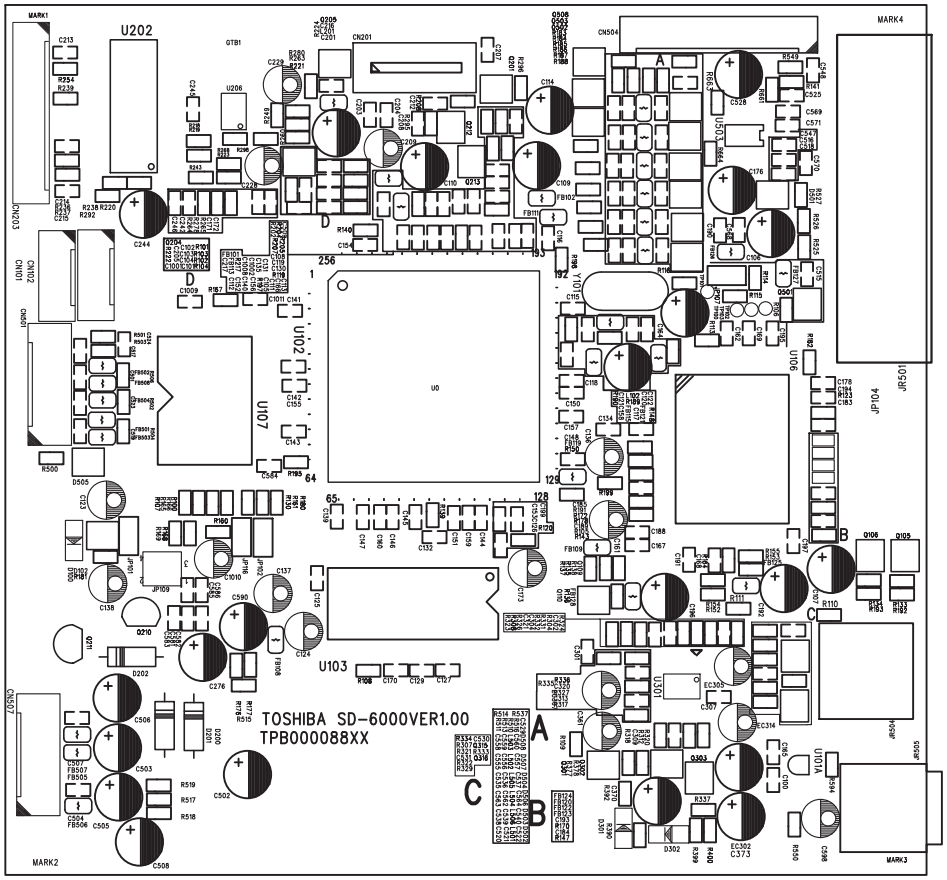

Main PC Board(Top side)

Main Board

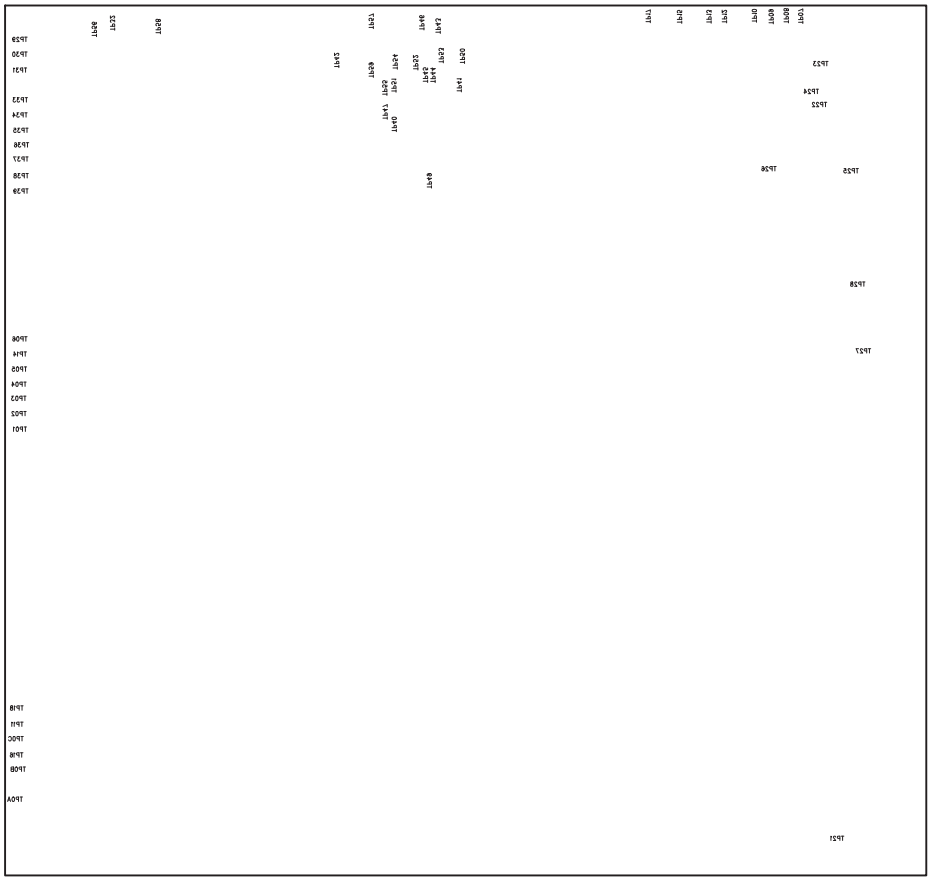
TP21
TP22
TP23
TP24
TP25
TP26
TP27
TP28
TP29
TP30
TP31
TP32
TP33
TP34
TP35
TP36
TP37
TP38
TP39
TP01
TP02
TP03
TP04
TP05
TP06
TP07
TP08
TP09
TP10
TP11
TP12
TP13
TP14
TP15
TP16
TP17
TP18
TP19
TP20
TP21
TP22
TP23
TP24
TP25
TP26
TP27
TP28
TP29
TP30
TP31
TP32
TP33
TP34
TP35
TP36
TP37
TP38
TP39
TP40

Front Display PC Board

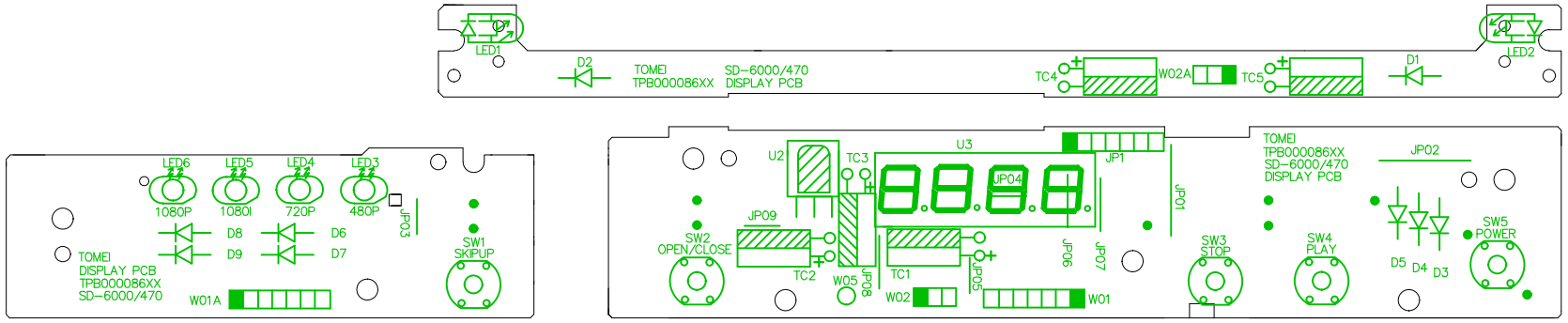

Front Display PC Board(TOP Side)

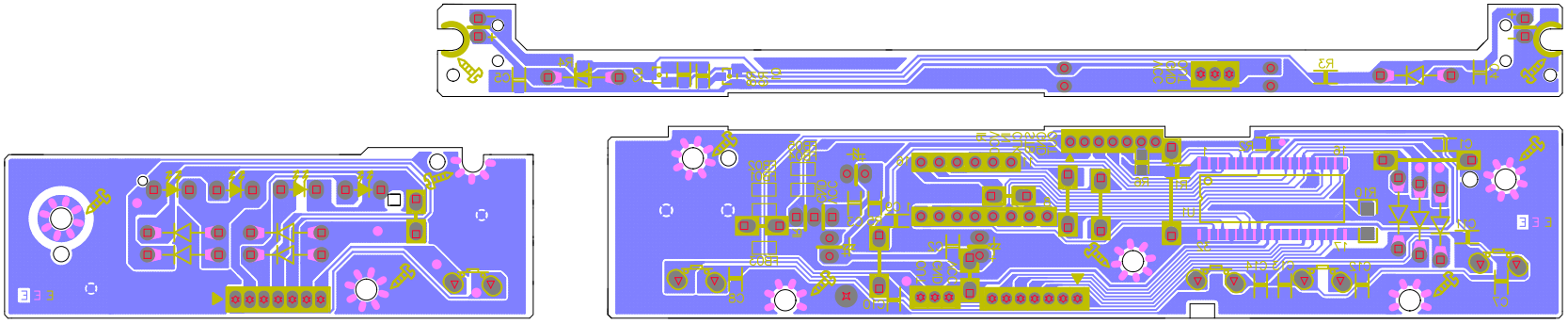

Front Display PC Board(bottom Side)

SCRAT PC Board

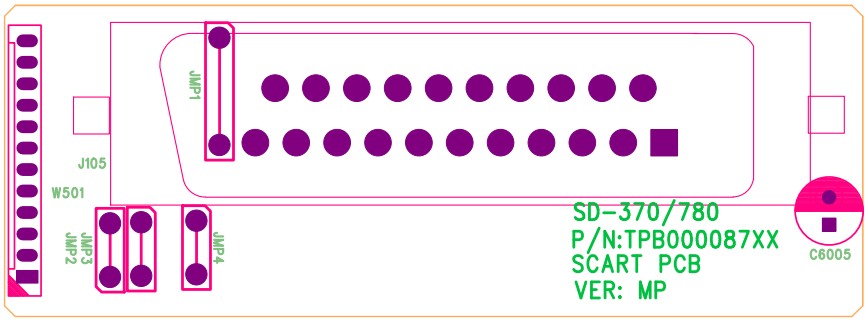

SCART PC Board(TOP side)

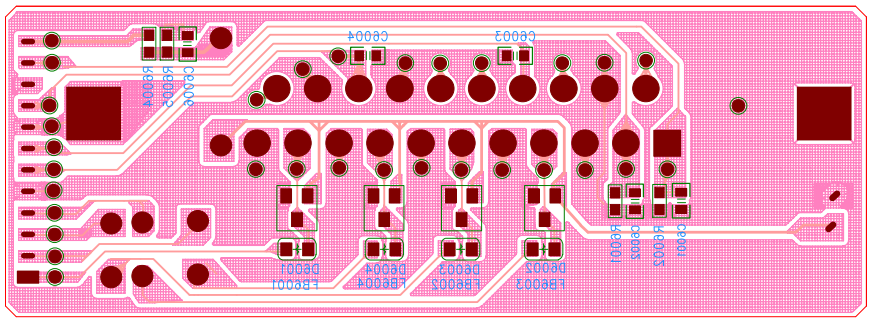

SCART PC Board(Bottom side)

IC BLOCK DIAGRAMS

TAS000080XX POWER IC U901 TNY276PN

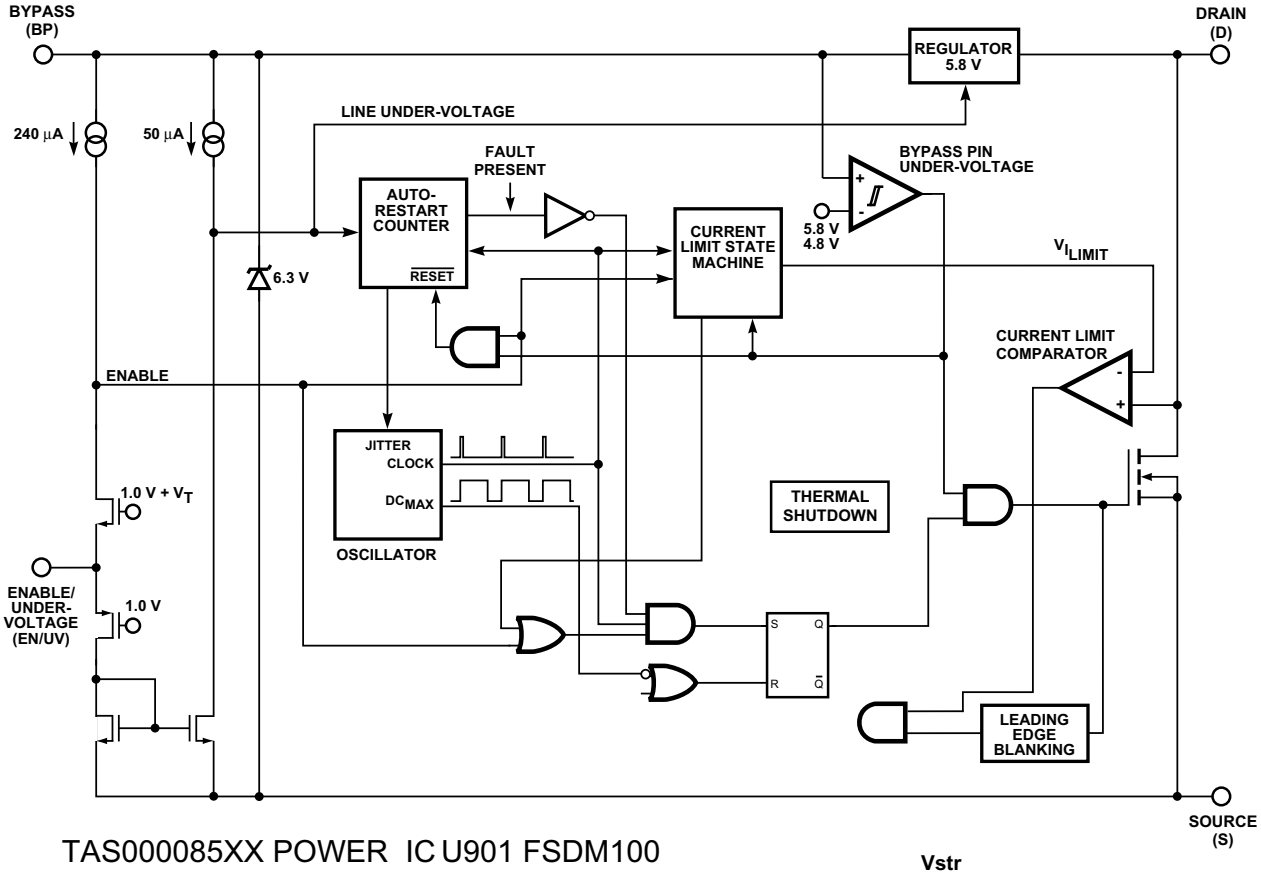

TAS000085XX POWER IC U901 FSDM100

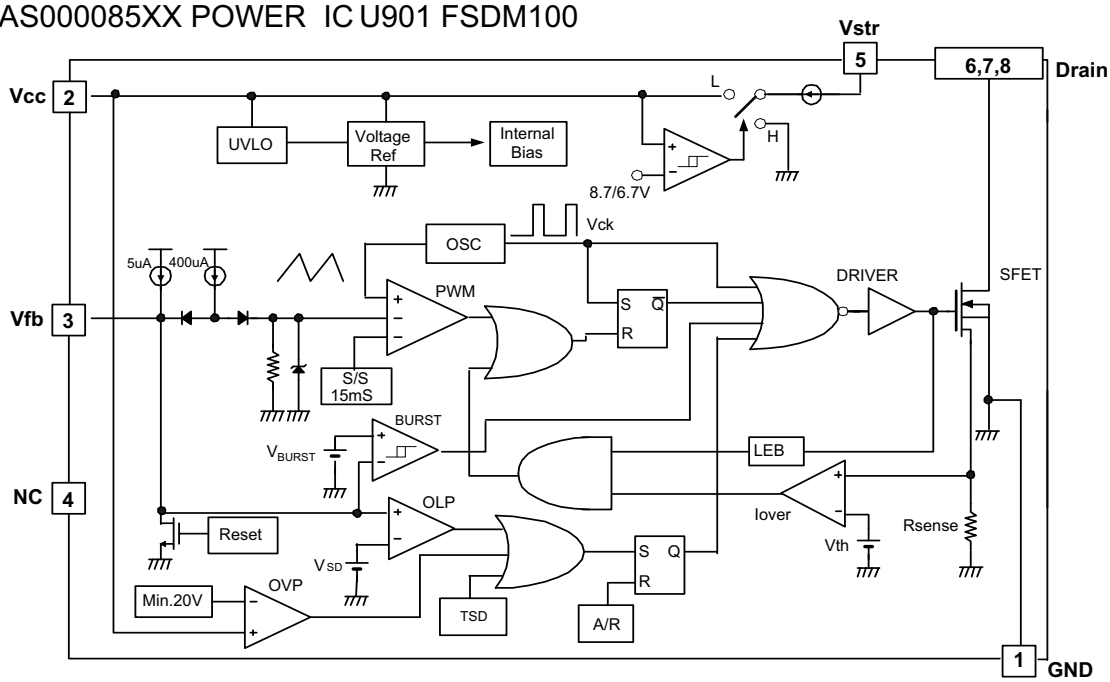

U903 TL431

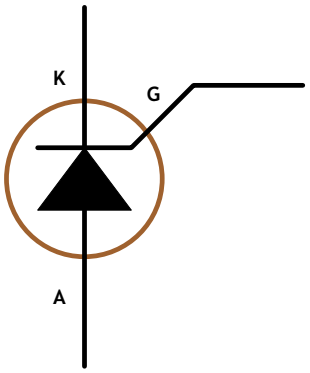

U902 EL817B/BPC-817

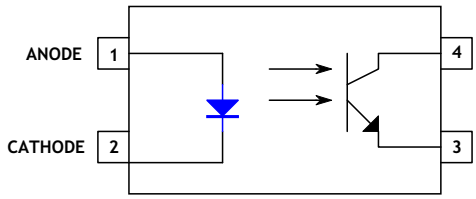

SDRAM IC U103 W9864G6EH-7

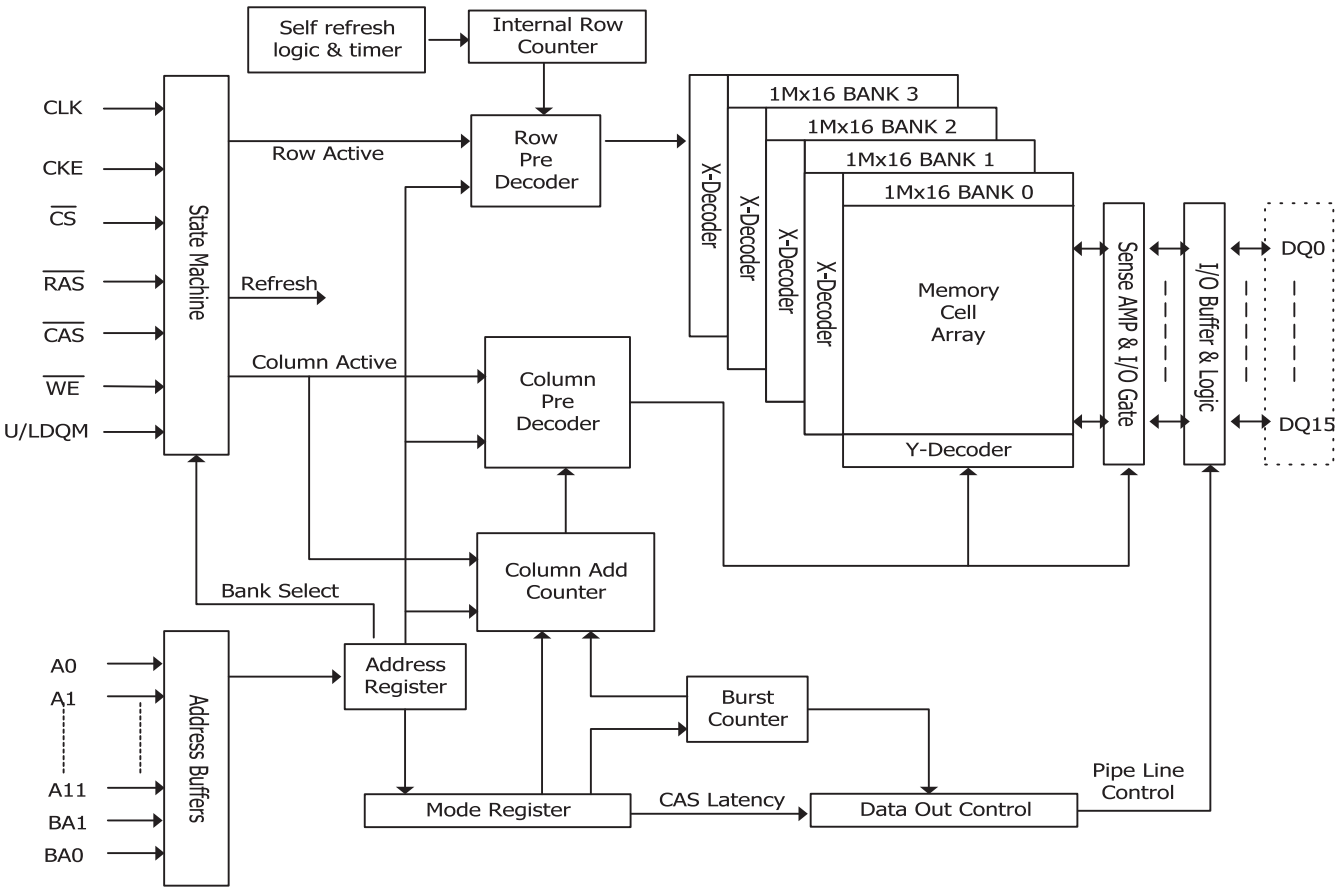

HDMI FLSAH IC U106 ZR36722

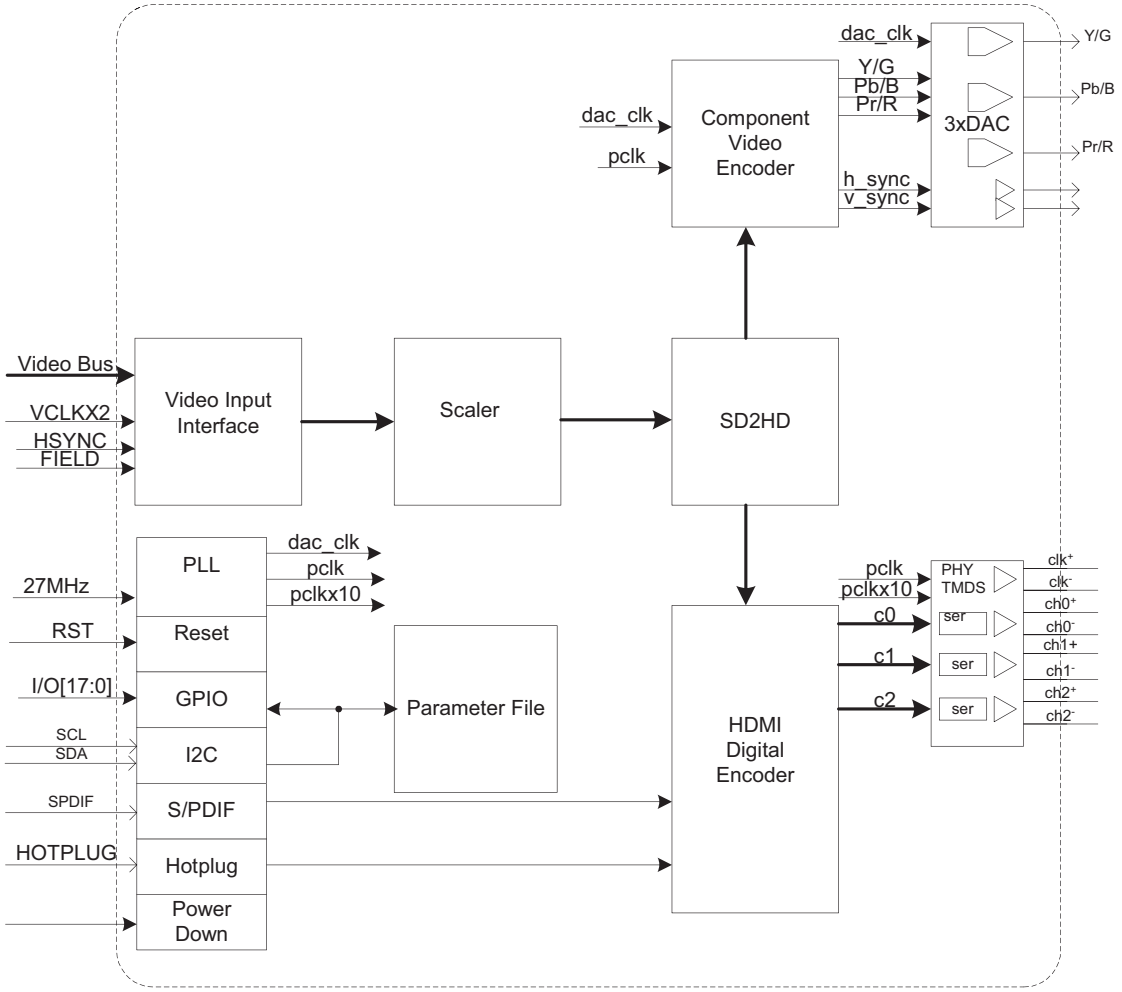

FRONT Drive IC U1 ETK6201

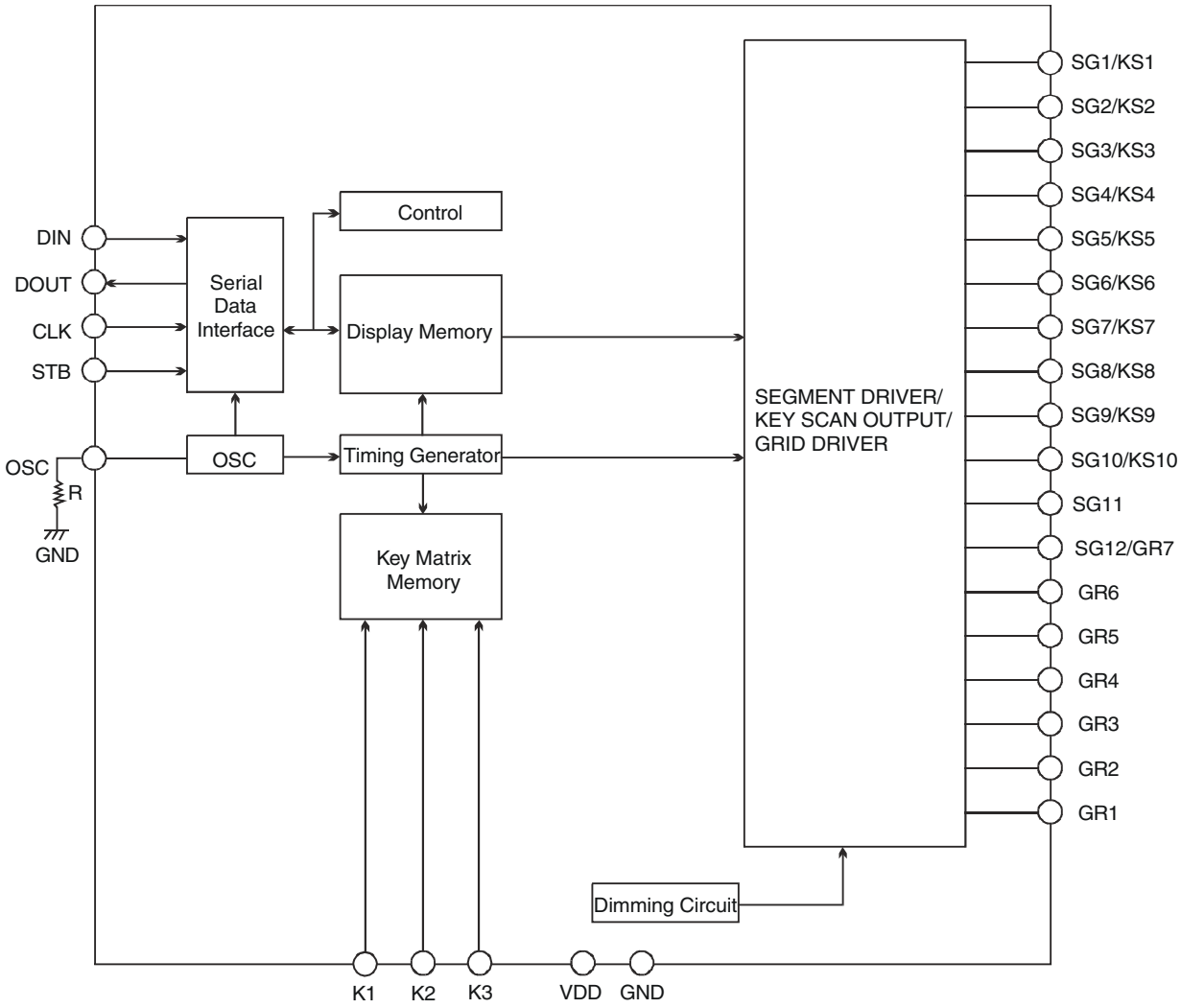

FLASH IC U107 SST39VF1601

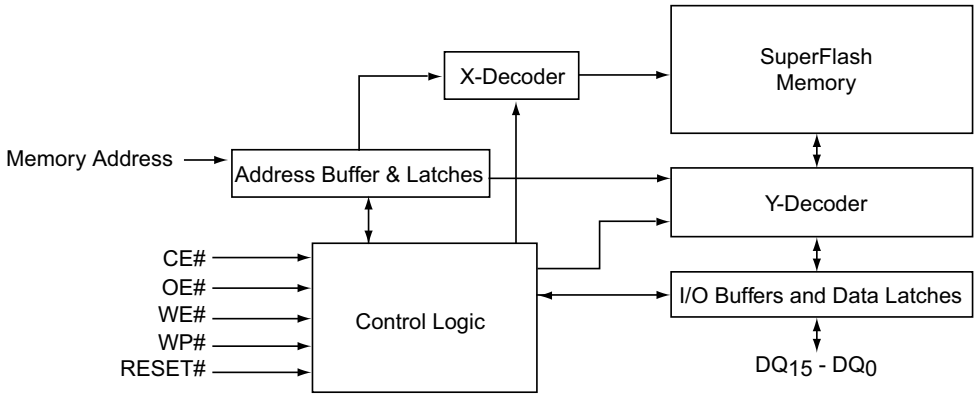

DRIVER IC U202 AM5888

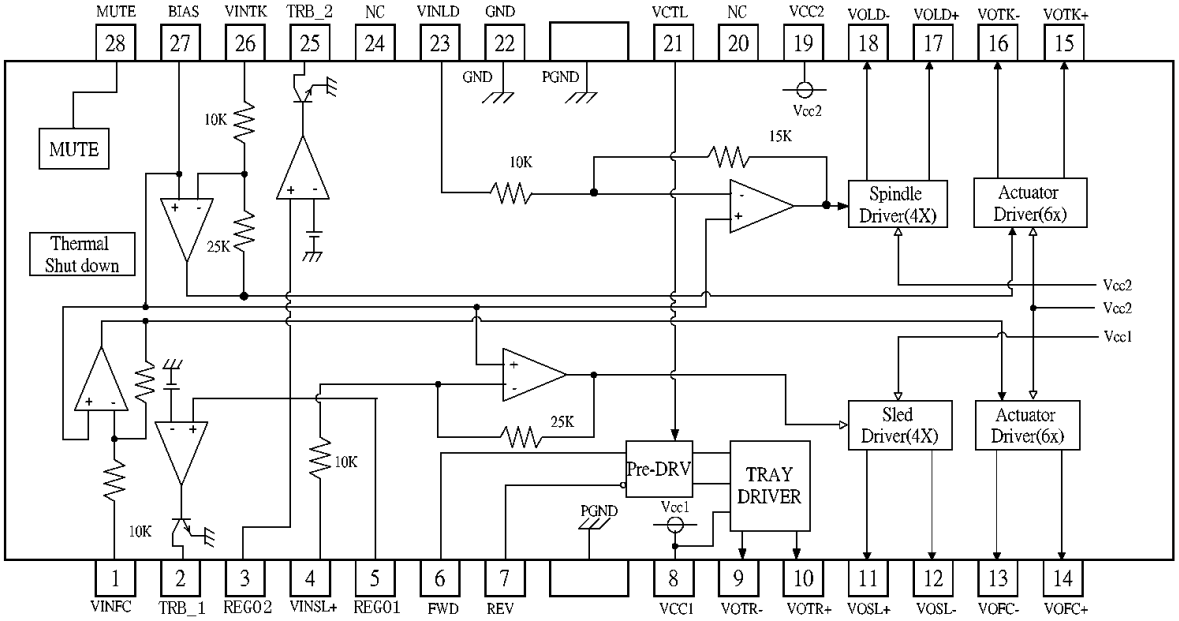

U101A LM78L05

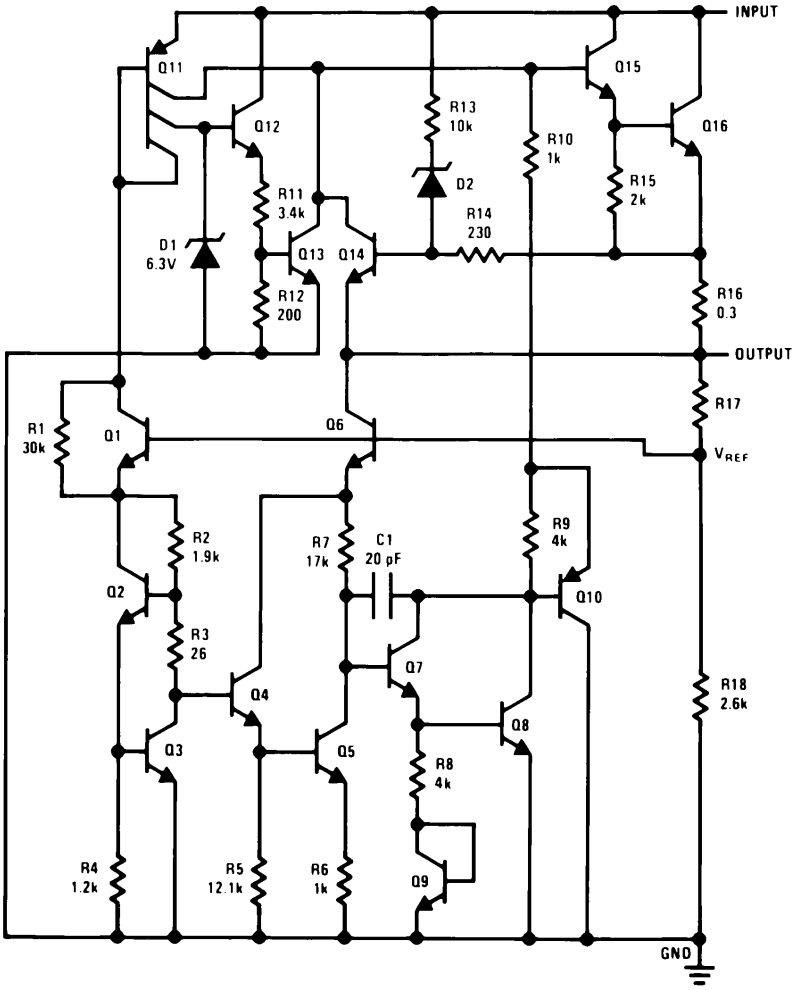

IC U503 PT2328-X

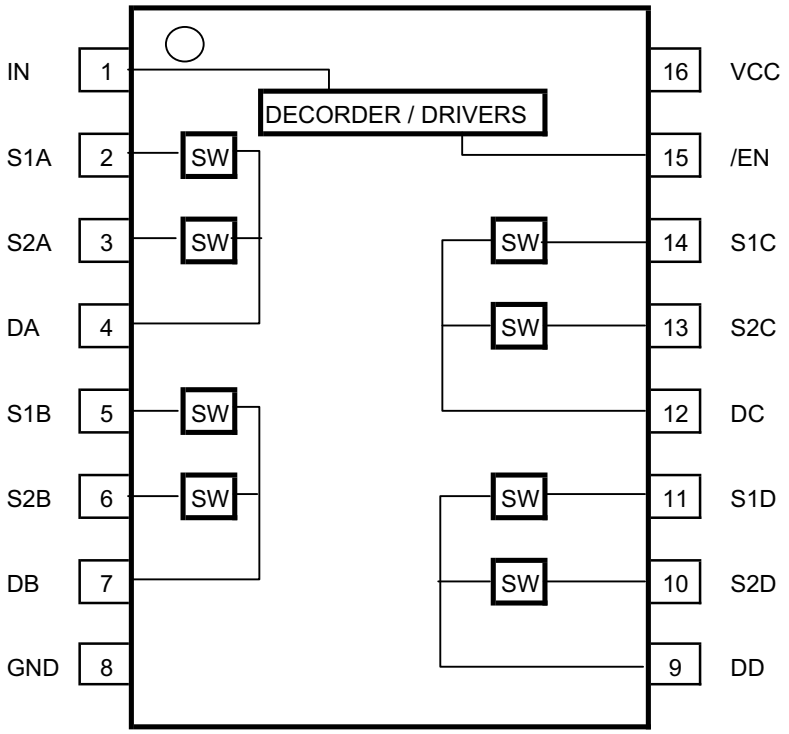

AUDIO AMP IC U301 UTC4558F

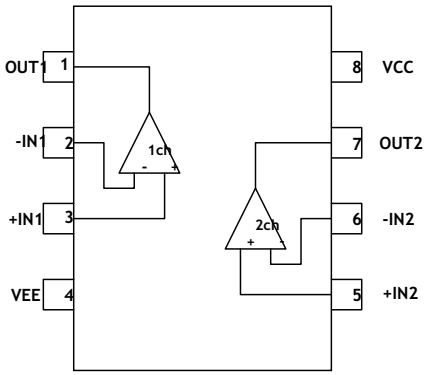

U206 LM358

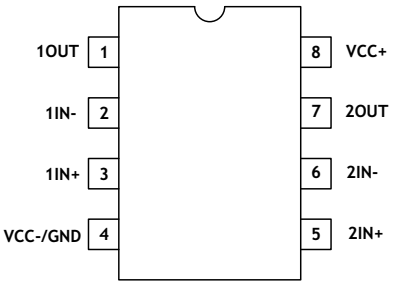

MPEG IC U102 ZR36886 CHIP

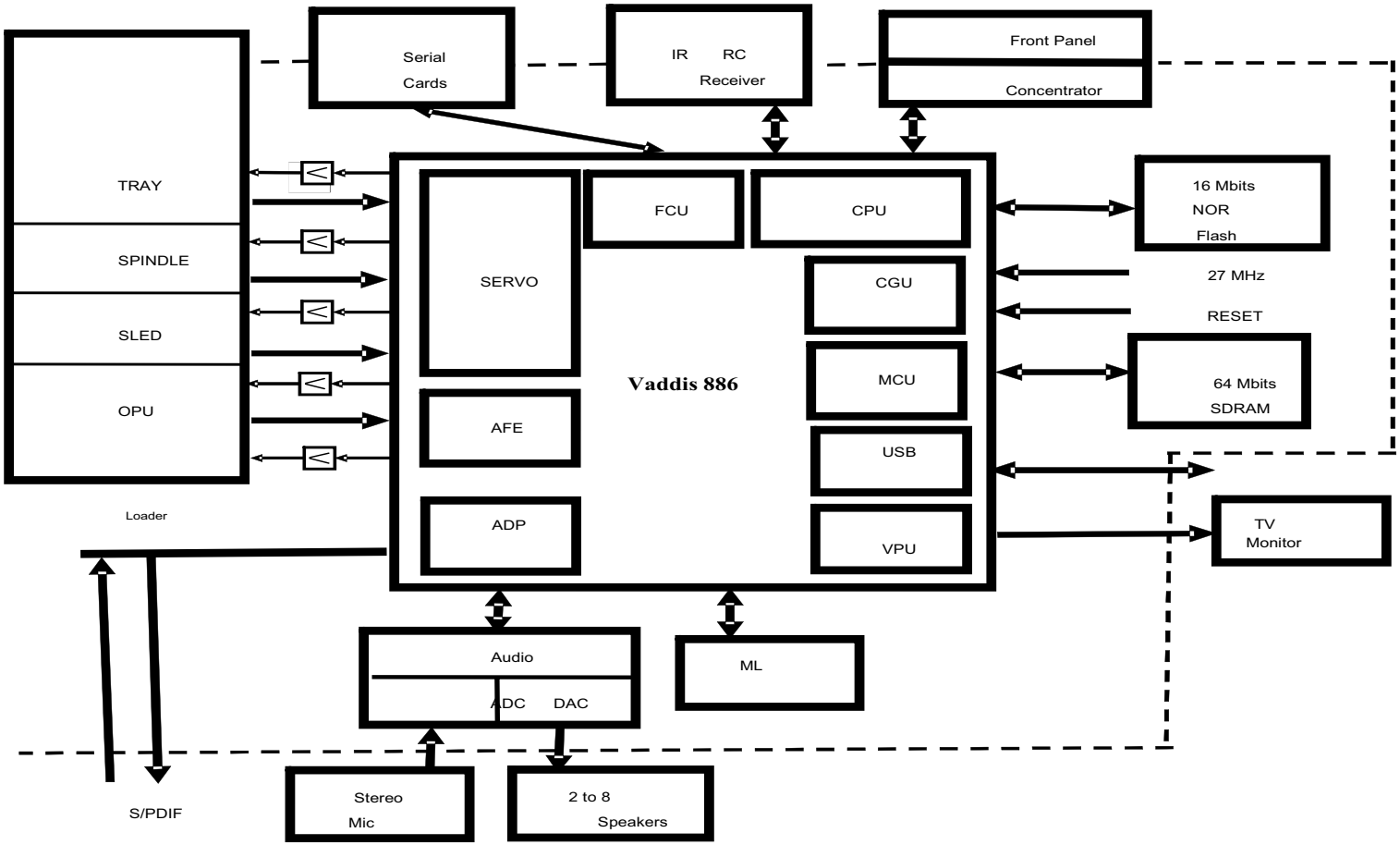

PARTS LIST

LOCATION No.	TSB P/N	Reference No.	Description
	AH910057	TSDAC20007A	REMOTE CONTROLLER,SE-R0217
	AH970201	TWR115012XX	AV-CABLE L=1500mm yellow/white/red
			(Inside wiry:0.12mm*10,outside shield wiry:0.1mm*18)
⚠	AH930077	TSDAC10080A	OWNER'S MANUAL OF ENGLISH-470EKE
⚠	AH930078	TSDAC10081A	OWNER'S MANUAL OF FRENCH-470EKE
⚠	AH930079	TSDAC10082A	OWNER'S MANUAL OF GERMAN-470EKE
⚠	AH930080	TSDAC10083A	OWNER'S MANUAL OF SPANISH-470EKE

SAFETY PRECAUTION

The parts identified by ⚠ mark are critical for safety. Replace only with part number specified. The mounting position of replacement is to be identical with originals. The substitute replacement parts which do not have the same safety characteristics as specified in the parts list may create shock, fire or other hazards.

PARTS LIST

LOCATION No.	TSB P/N	Reference No.	Description
	AH910058	TSDAC20007B	REMOTE CONTROLLER,SE-R0217
	AH970201	TWR115012XX	AV-CABLE L=1500mm yellow/white/red
			(Inside wiry:0.12mm*10,outside shield wiry:0.1mm*18)
	AH970136	TWR100006XX	HDMI CABLE 19PIN 18AWG TWO CONNECT
			DCIP019ST30150B
⚠	AH970248	TSDAC10096A	OWNER'S MANUAL OF FRENCH-472EKF

SAFETY PRECAUTION

The parts identified by ⚠ mark are critical for safety. Replace only with part number specified. The mounting position of replacement is to be identical with originals. The substitute replacement parts which do not have the same safety characteristics as specified in the parts list may create shock, fire or other hazards.

PARTS LIST

NO.	TSB P/N	Reference NO.	Description
MAIN UNIT			
1	AH920122	TSDAS30058A	FRONT PANEL ASS'Y(MECHANICAL)-470E
2	AH970246	TSDNM20064A	DVD DOOR-470E
3	AH920114	TAS000079XX	FRONT PCB ASSEMBLY OF SD-6000
4	AH920123	TAS000083XX	MAIN PCB ASSEMBLY OF SD-470E
5	AH920104	TAS000075XX	SCART PCB ASSEMBLY OF SD-370E-K-TBTETF
6	AH940010	TSDMT10025B	TOP COVER-4000
7	AH920117	TAS000080XX	POWER PCB ASS'Y FOR SD-6000
or	AH920125	TAS000085XX	POWER PCB ASS'Y FOR SD-5000(OKI-P00806C)
8	AH970249	TSDAS20036A	MECHA ASS'Y FOR SD-472EKF
9	AH970247	TSDEL40007A	FFC (DVD Mecha - Main PCB)

EXPLODED VIEWS

MAIN UNIT

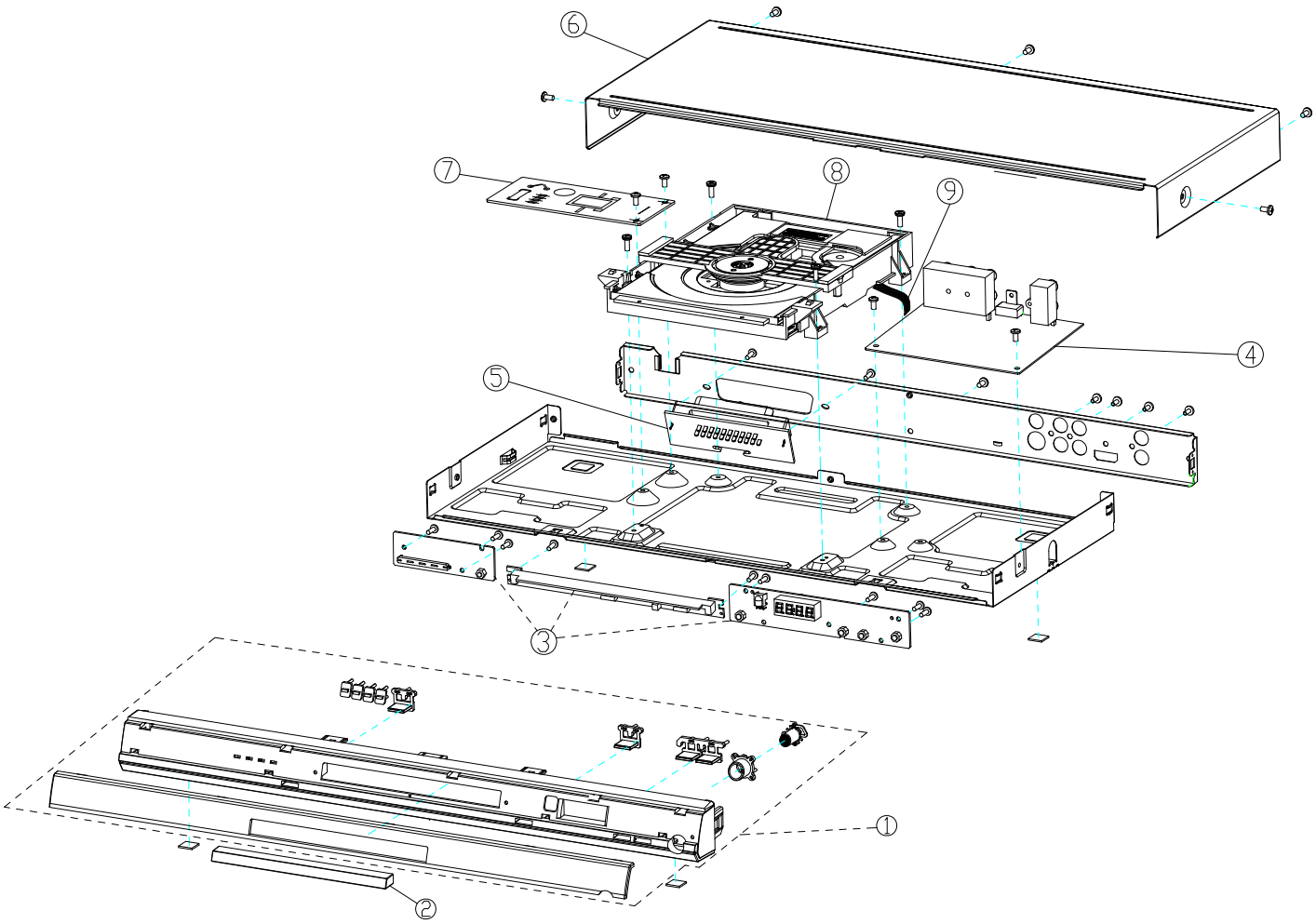

Specifications

DVD Video player/outputs/supplied accessories

DVD Video player

Power supply	100V-240V AC ~ 50/60 Hz
Power consumption	11 W
Mass	1.63kg
External dimensions	430 x 40 x 199 mm (W/H/D)
Signal system	PAL/NTSC
Laser	Semiconductor laser, wavelength 650/780 nm
Frequency range	DVD linear sound: 48 kHz sampling 4 Hz to 22 kHz 96 kHz sampling 4 Hz to 44 kHz
Signal-to-noise ratio	More than 100 dB
Audio dynamic range	More than 93 dB
Harmonic distortion	Less than -70dB
Wow and flutter	Below measurable level (less than ±0.001 % (W.PEAK))
Operating conditions	Temperature: 5 °C to 35 °C, Operation status: Horizontal

Outputs

Video output (SCART with RGB)	1.0V (p-p), 75Ω, SCART socket x 1
Video output	1.0 V (p-p), 75 Ω, negati ve sync., pin jack x 1
Component video output	(Y) 1.0 V (p-p), 75 Ω, negative sync., pin jack x 1 (P_B)/(P_R) 0.7 V (p-p), 75Ω, pin jack x 2
Audio output (COAXIAL DIGITAL)	0.5V (p-p), 75Ω, pin jack x 1
Audio output (ANALOG)	2.0 V (rms), 680Ω, pin jacks (L, R) x 1
HDMI output	19 pin

Supplied Accessories

Audio/video cable 1
Remote control (SE-R0217) 1
Batteries (AAA) 2
HDMI Cable **1**

- This model complies with the above specifications.
- Designs and specifications are subject to change without notice.
- This model may not be compatible with features and/or specifications that may be added in the future.

TOSHIBA CORPORATION
1-1, SHIBAURA 1-CHOME, MINATO- KU, TOKYO 105-8001, JAPAN